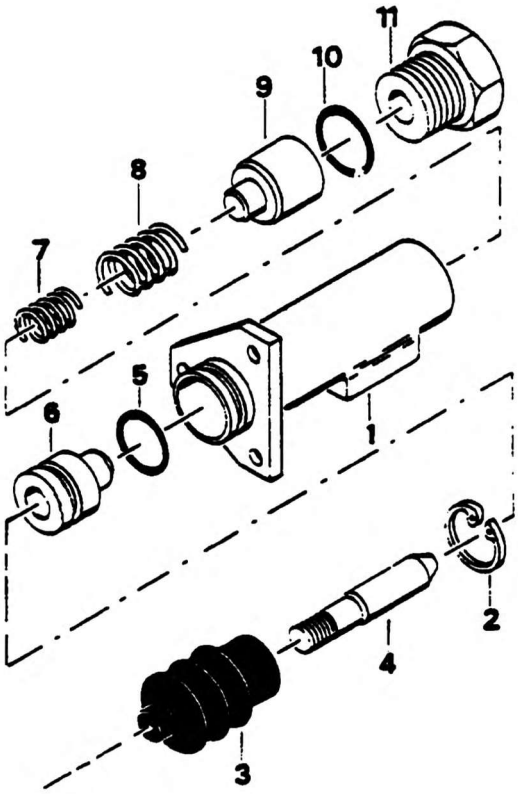

7926001304

(SHEET 1 OF 1)